BOLYMIN

BG12864C

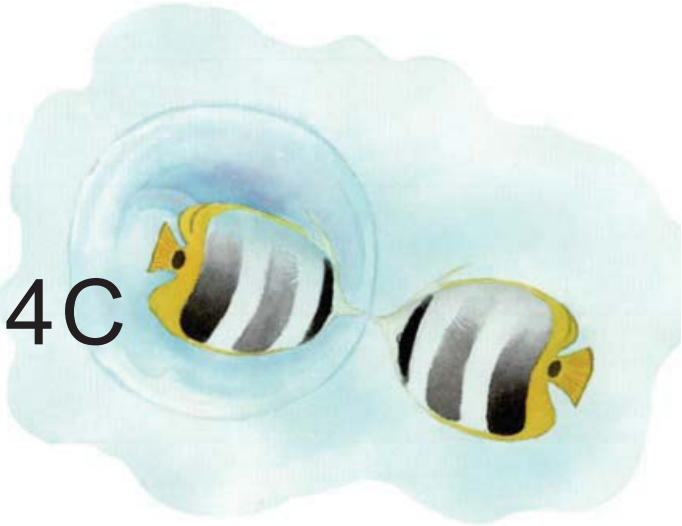

Feature

1. COB with metal frame
2. Built-in controller KS0107/0108
3. + 5V single power supply, with built-in negative voltage
4. 1/64 duty cycle
5. Option: LED, EL B/L
6. Option: External negative voltage

Mechanical Data

Item	Standard Value	Unit
Module Dimension	80.0 x 70.0	mm
Viewing Area	72.0 x 40.0	mm
Dot Size	0.48 x 0.48	mm
Dot Pitch	0.52 x 0.52	mm

Pin Assignment

Pin	Symbol	Function
1	Vss	GND
2	Vdd	Power supply (+5V)
3	Vo	Contrast adjustment
4	D/I	Data/instruction
5	R/W	Data read/write
6	E	H -->L Enable signal
7~14	DB0~7	Data bus line
15	CS1	Chip select for IC1
16	CS2	Chip select for IC2
17	/RST	Reset
18	Vee	Negative voltage output
19	A	Power supply for B/L (+)
20	K	Power supply for B/L (GND)

Electronic Characteristics

Item	Symbol	Condition	Typical Value	Unit
Input Voltage	Vdd	Vdd = +5V	5.0	V
Supply Current	Idd	Vdd = +5V	13	mA
LCD Driving Voltage	Vdd-Vo	25°C	9.0	V
LED Forward Voltage	Vf	25°C	4.2	V
LED Forward Current	If	25°C	330	mA
EL Power Voltage	Vel	Vel=110Vac/400Hz		V
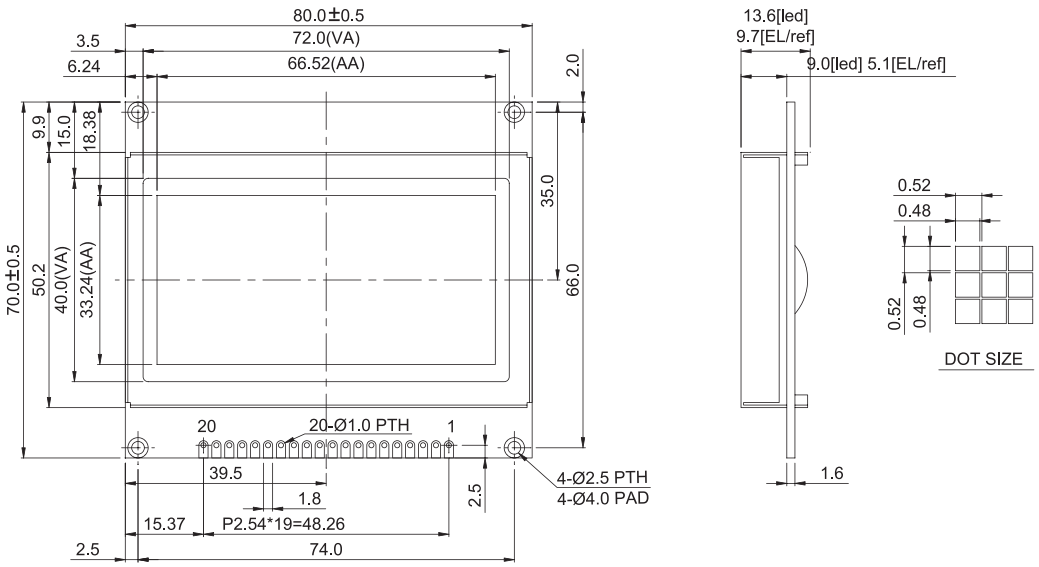
Dimension